SKU #	Radiator DWG #	Radiator P/N	Transmission	Core Size	Shroud & Fan DWG #	Shroud & Fan P/N	Fan Type	Dimension "X"
1-2580-102LP	1-2580-Radiator	1-2580-100	Manual	STANDARD (2 Rows of 1" Tubes)	1-2580-002 (Shroud)	1-2580-002LP	Low Profile	6"
1-2580-102MD						1-2580-002MD	Medium Duty	6.5"
1-2580-102HP						1-2580-002HP	High Performance	7.5"
1-2580-112LP		1-2580-110	Automatic			1-2580-002LP	Low Profile	6"
1-2580-112MD						1-2580-002MD	Medium Duty	6.5"
1-2580-112HP						1-2580-002HP	High Performance	7.5"

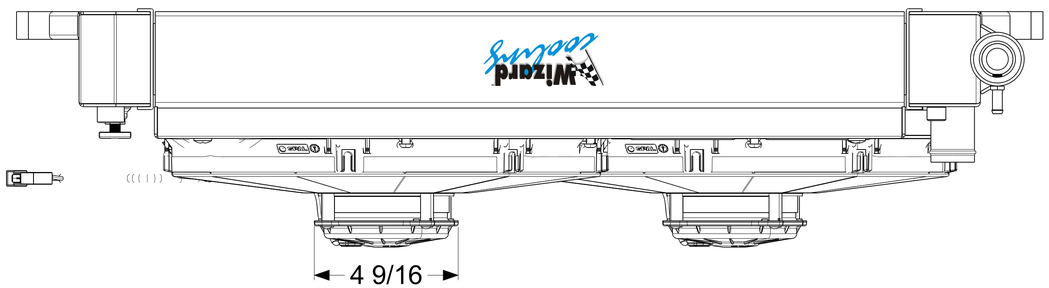

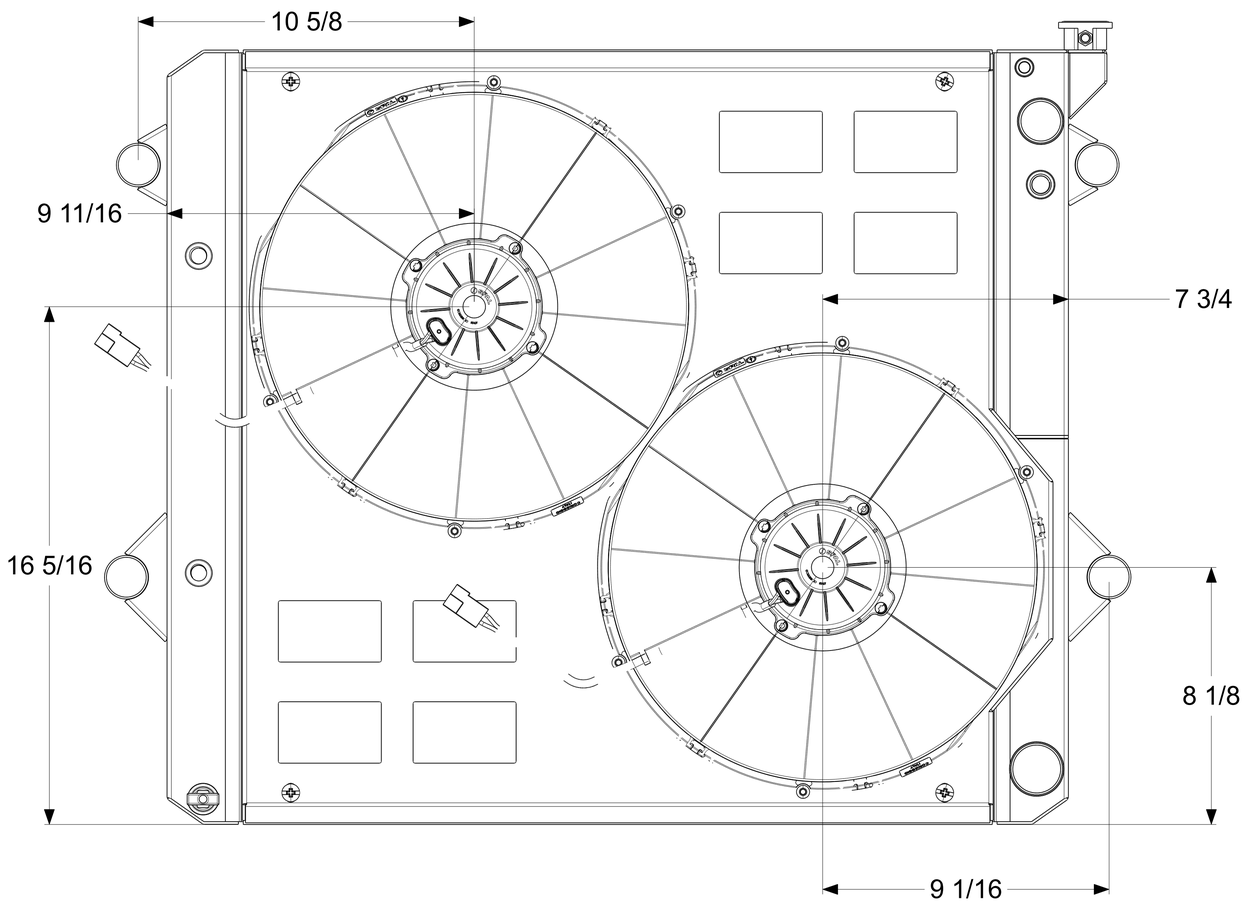

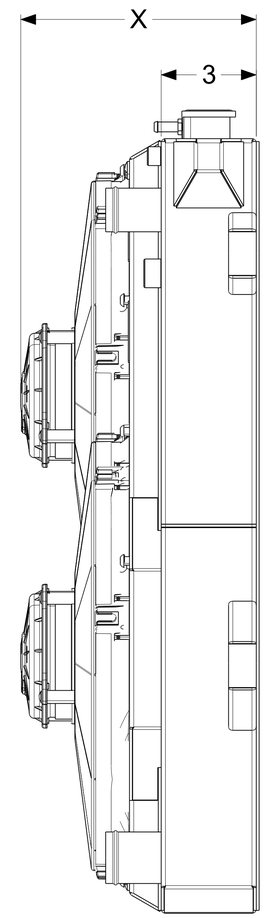

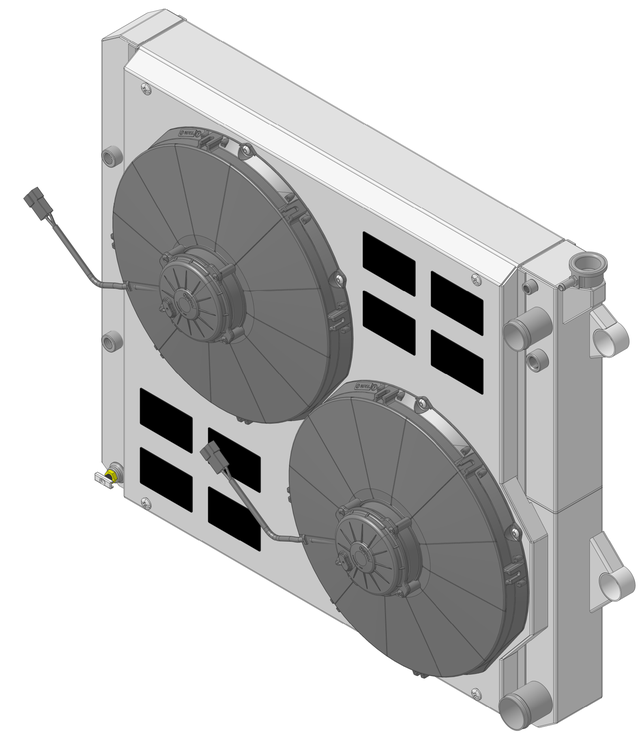

Wizard cooling
Custom Aluminum Radiators
www.wizardcooling.com

Contact Us:
716-655-6760

Part Number

1-2580-LS Radiator
&
1-2580-002
Dual 13"
Brushed Fan Shroud