REVISIONS				
ZONE	REV	DESCRIPTION	DATE	APPROVED

Assembly Part #	Transmission	Fan Type	Core Size
1-362-202LSBLXXACIN	Manual	Brushless	UPGRADED (2 Rows of 1.25" Tubes)
1-362-212LSBLXXACIN	Automatic		

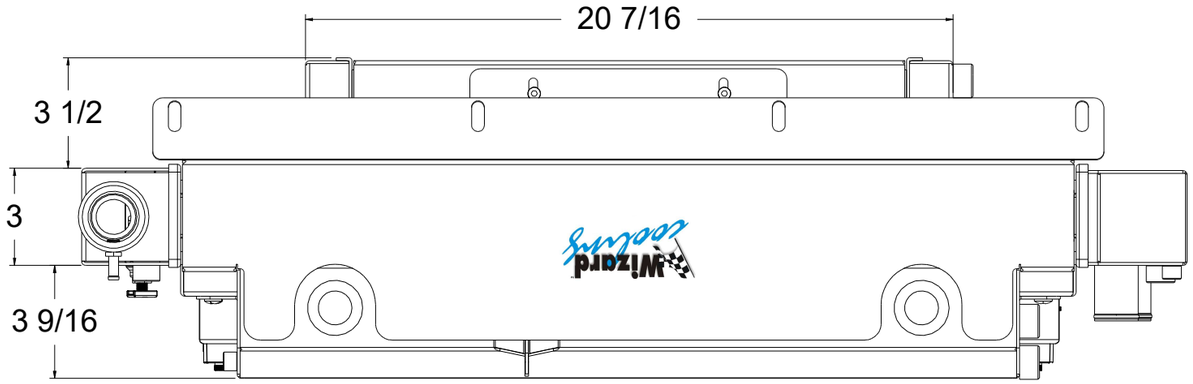

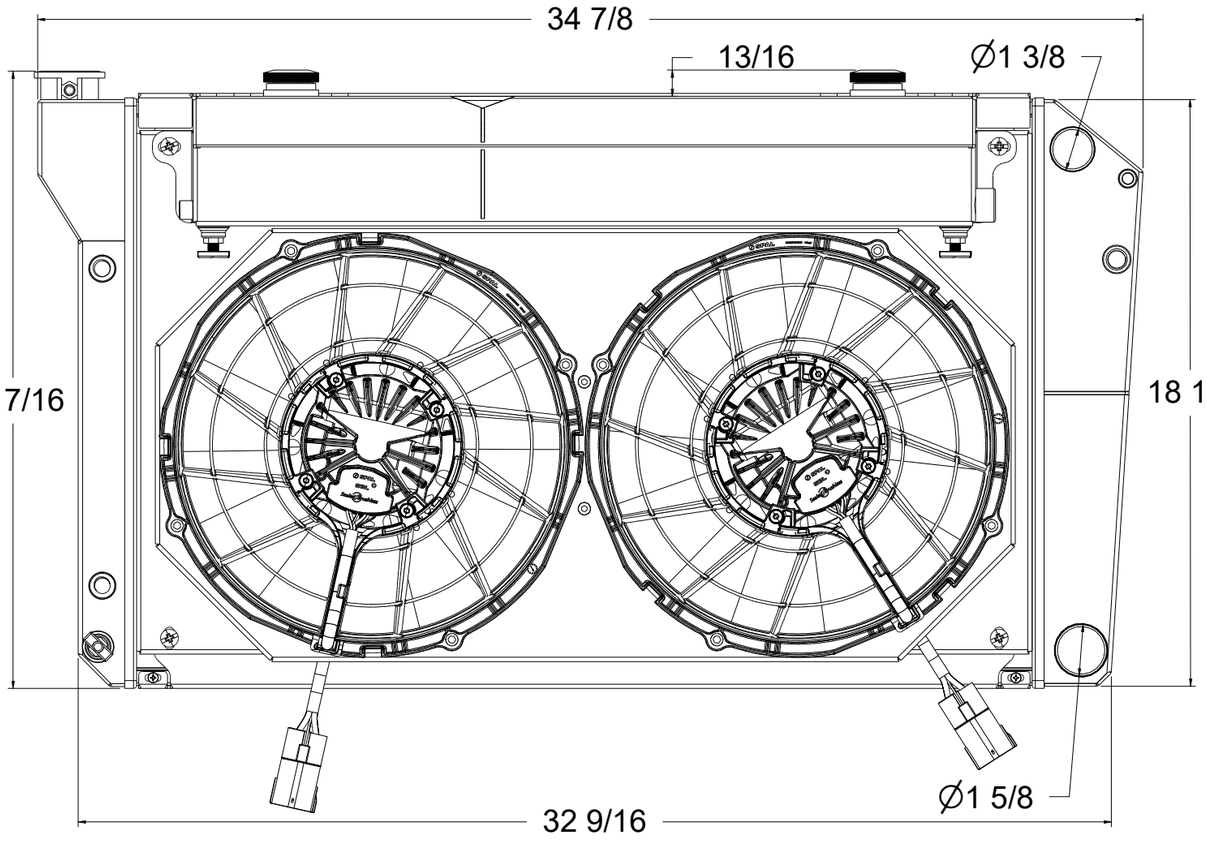

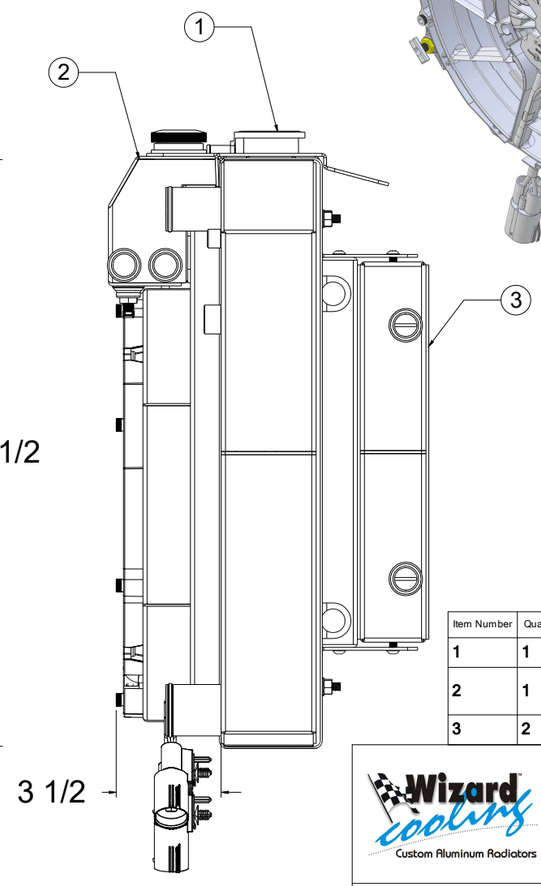

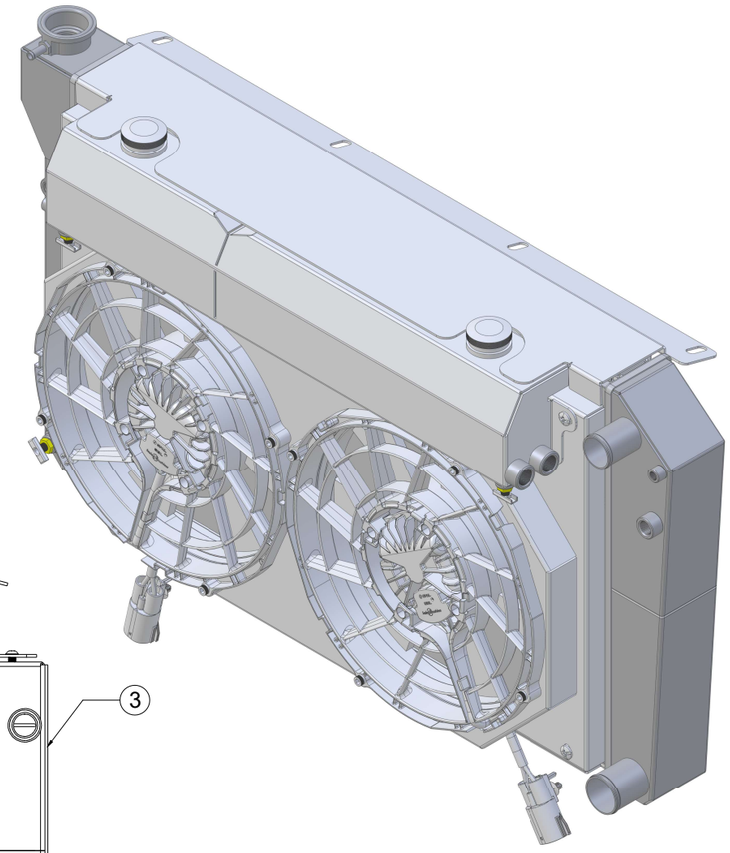

Item Number	Quantity	Part Number	Part Name	Revision	Comment
1	1	1-362-LS Radiator	362 LS Radiator Assermbly		
2	1	1-361-002BLXX275	Dual 12" Brushless Fan Shroud w/ Intercooler Reservoir & Expansion Tank		
3	2	1-361-000ACIN	361 AC & Intercooler Assembly		

Wizard cooling
Custom Aluminum Radiators

DRAWN	SH	DATE 12-4-23
CHECKED		
QA		
MFG		
APPROVED		

Title: **1-362 Beast Assemblies**

SIZE	FSCM NO.	DWG NO.	REV
D			-

SCALE 1:1 SHEET