REVISIONS				
ZONE	REV	DESCRIPTION	DATE	APPROVED

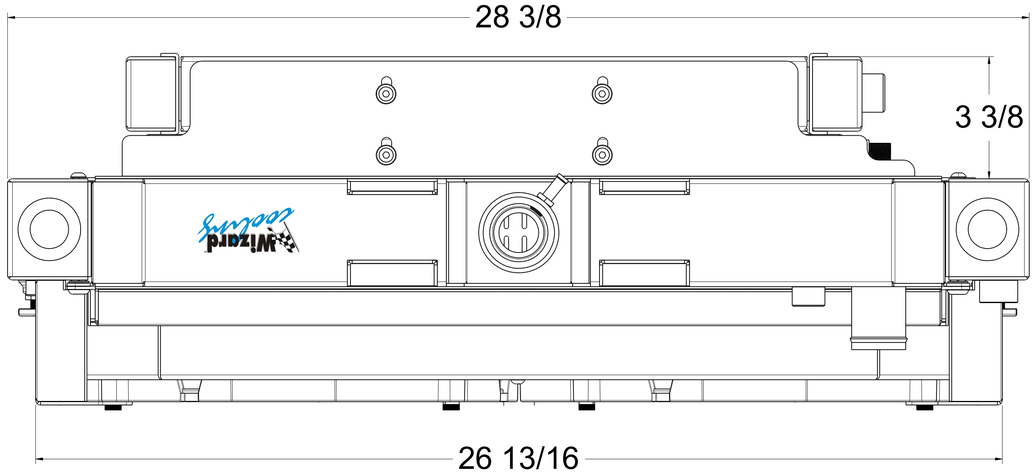

Assembly Part #	Transmission	Fan Type	Core Type
1-379-212CSBLACINXX300	Automatic	300 Watt Brushless	Upgraded 2 Rows Of 1.25" Tubes

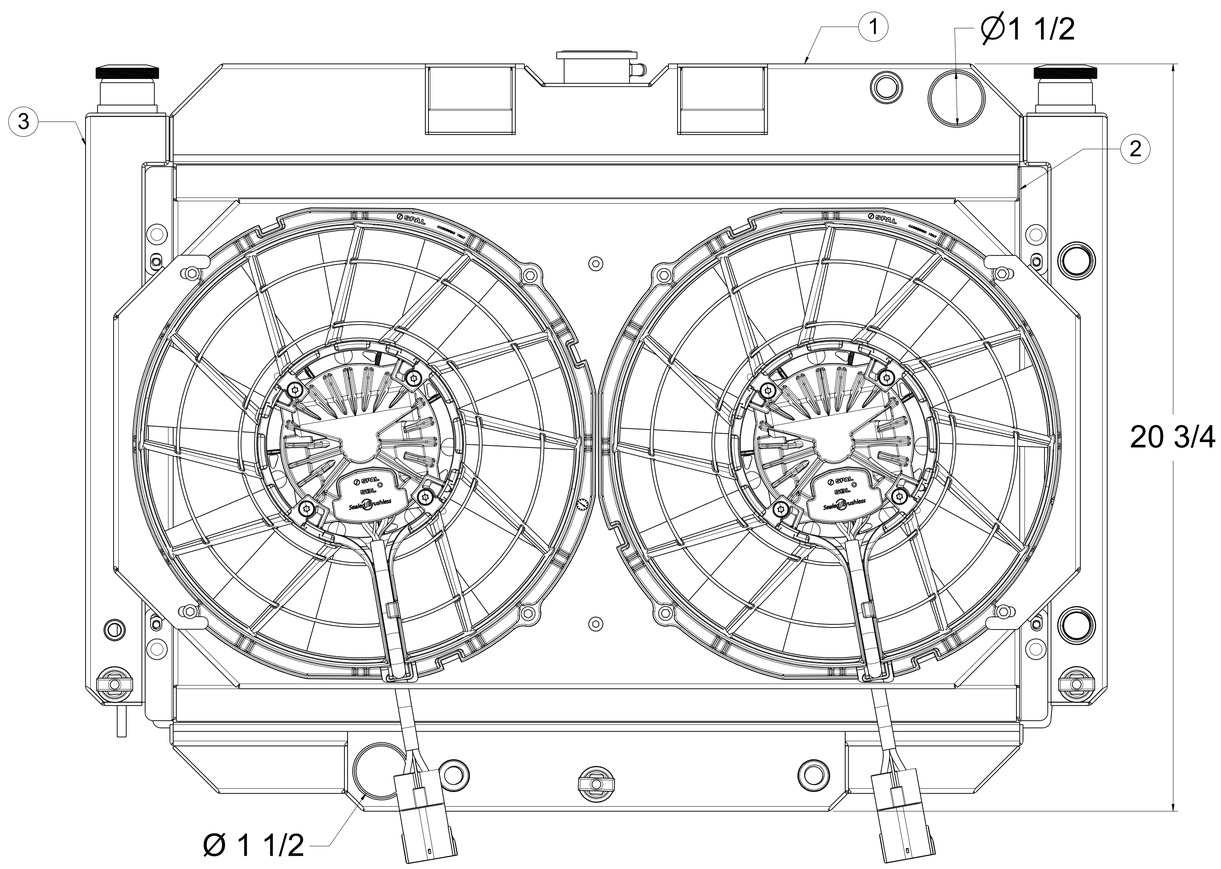

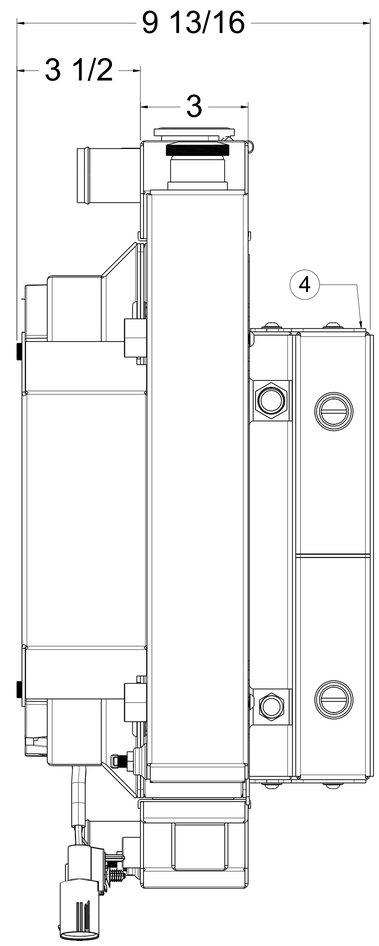

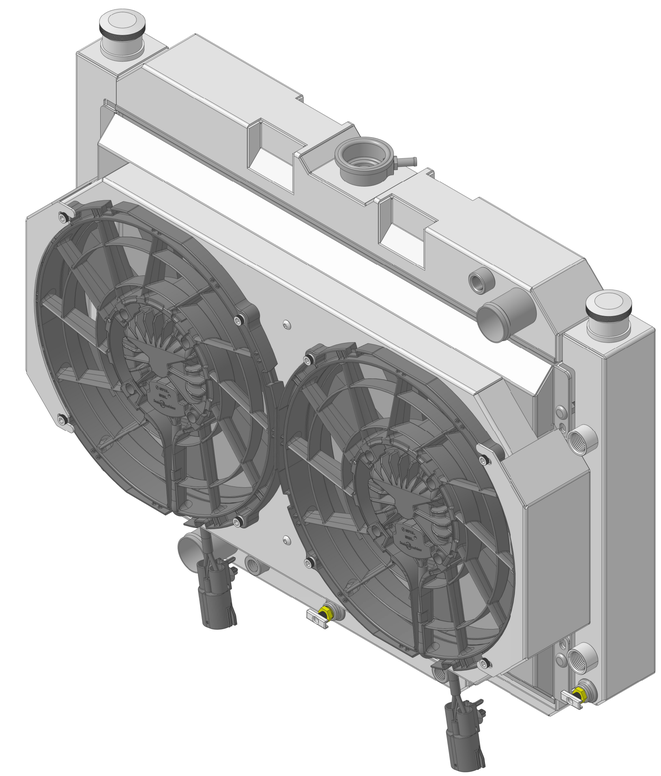

Item Number	Quantity	Part Number	Part Name	Revision	Comment
1	1	1-379-CS Radiator	379 Coyote Swap Radiator		
2	1	1-379-002BL	379 Dual 12" Brushless Fans & Shroud		
3	1	1-379-000XX	379 X-Tank & Intercooler Resevoir		
4	1	1-379-000ACIN	379 AC & Intercooler W/ Mount BRKTS		

Wizard cooling
Custom Aluminum Radiators

DRAWN	SH	DATE 5-17-25
CHECKED		
QA		
MFG		
APPROVED		

Title: **1-379-CSBLACINXX Automatic Transmission**

SIZE	FSCM NO.	DWG NO.	REV
D			-

SCALE 1:1 SHEET